PMK -2 ~ 150

optional full stainless steel version

Permanent magnetic coupling

with collet clamps

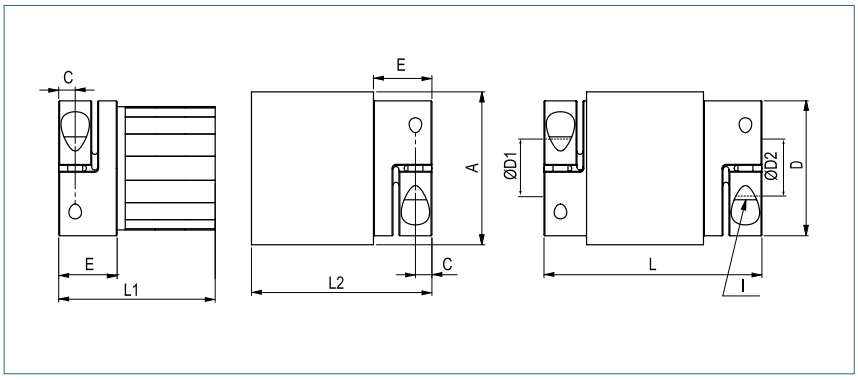

Order Code **PMK - 18 - 16 - 20**

Type | Size | ØD1 (H7) | ØD2 (H7)

Size	Torque TKN (Nm)	Dimensions (mm)											Technical Data					
		L	Ø A	D1/D2	L1	L2	H	C	E			I						
		Length	Outer	Bore Size (H7) min~max						Magnet-length	Hub Ø	Screw (ISO4762) TA (Nm)	Mass Inner-part (kg)	Mass Outer-part (kg)	Inertia Innerpart (g m²)	Inertia Querpart (g m²)	Misalignment radial ΔKr (mm)	max speed min-1
2	1.2	55	31	3-14	39	41	9	3.5	11	20	25	M3 / 2	0.07	0.11	0.005	0.018	0.5	10000
4	2.5	58	38	6-18	40	42	12	5	13	20	32.5	M4 / 3.5	0.11	0.15	0.01	0.04	0.5	9000
10	5	58	46	6-25	39.5	41.5	15.5	5	13.5	20	40.5	M4 / 4.5	0.16	0.2	0.04	0.08	0.5	8000
18	9	78	51	10-25.4	53.5	58.5	17	5,5	19,5	30	45	M5 / 8	0.23	0.28	0.07	0.14	0.5	7000
30	13	88	56	10-32	58.5	63.5	20	7,5	24.5	30	56	M6 / 15	0.28	0.35	0.1	0.21	0.5	6000
60	30	107	67	12-35	73	78	23	10	29	40	66	M8 / 40	0.53	0.7	0.3	0.6	0.5	5000
150	60	130	84	12-44	91.5	93.5	28	11	33.5	50	82	M10 / 84	0.9	1.5	1.1	1.3	0.4	4000

Material Clamping hub: aluminium
Magnetic media: stainless steel

Keyway optional acc. DIN 6885

Range of temperature -30 °C ~ 100 °C

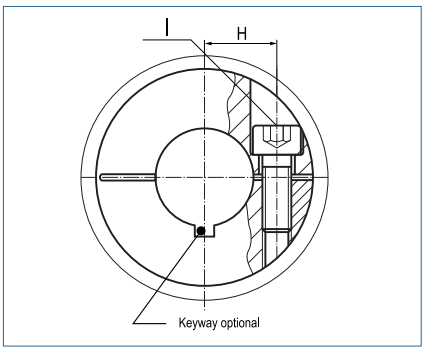

Characteristics

wear-free

maintenance-free

The coupling consists of 2 separated halves; the bearing has to be provided by the customer

Infinitely variable torque adjustable by immersion depth

In case of overload the power transmission will be separated from the inner and outer part (by slightly jerking)