optional full stainless steel version

Collar

in wide version

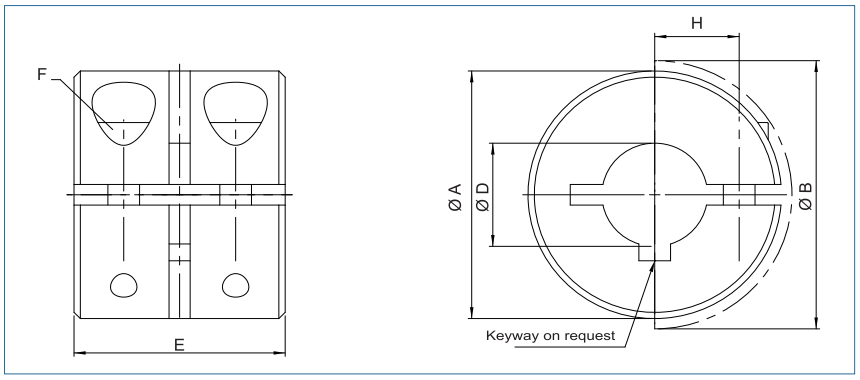

Order Code	**KR-B**	**-**	**16**	**steel blackened**
	Type		Size	
Order Code	**KR-B-VA**	**-**	**16**	**stainless steel**
	Type		Size	

Collar in wide version											
Size	axial force N		Dimensions					F Screw (ISO4762)	Tightening Torque Screws Nm		Mass kg
	steel	stainless steel (VA)	Standard Bore D / H7	A mm	H mm	E mm	B mm		steel	stainless steel (VA)	
6	3050	1734	6	16	5	20	20.7	M3x8	2	1.3	0.025
8	3050	1734	8	18	6	20	22.4	M3x8	2	1.3	0.030
10	2670	1516	10	24	8	20	26	M3x10	2	1.3	0.052
12	4830	2796	12	28	9,5	24	31.8	M4x12	5	3	0.086
16	7880	4576	16	34	12	29	39.4	M5x16	10	6	0.148
20	11080	9224	20	40	14.5	33	47.5	M6x18	15	10	0.229
25	10472	8716	25	45	16.5	33	50.8	M6x18	15	10	0.266
30	9618	8006	30	54	21	33	58.6	M6x18	15	10	0.384
40	8936	7438	40	60	25	33	66	M6x18	15	10	0.383
50	16270	9458	50	78	32	41	87	M8x25	42	25	0.837

Bore tolerance	H7
Material	steel blackened stainless steel blank
Keyway	optional acc. DIN 6885
Temperature Range	-40 °C ~ 175 °C